KEY	QTY	PART NUMBER	DRWG. NO.	DESCRIPTION

RH FAN ASSEMBLY
TECHMARK, INC. PART #700504
SHOWN WITH RH/CO2 ASSEMBLY

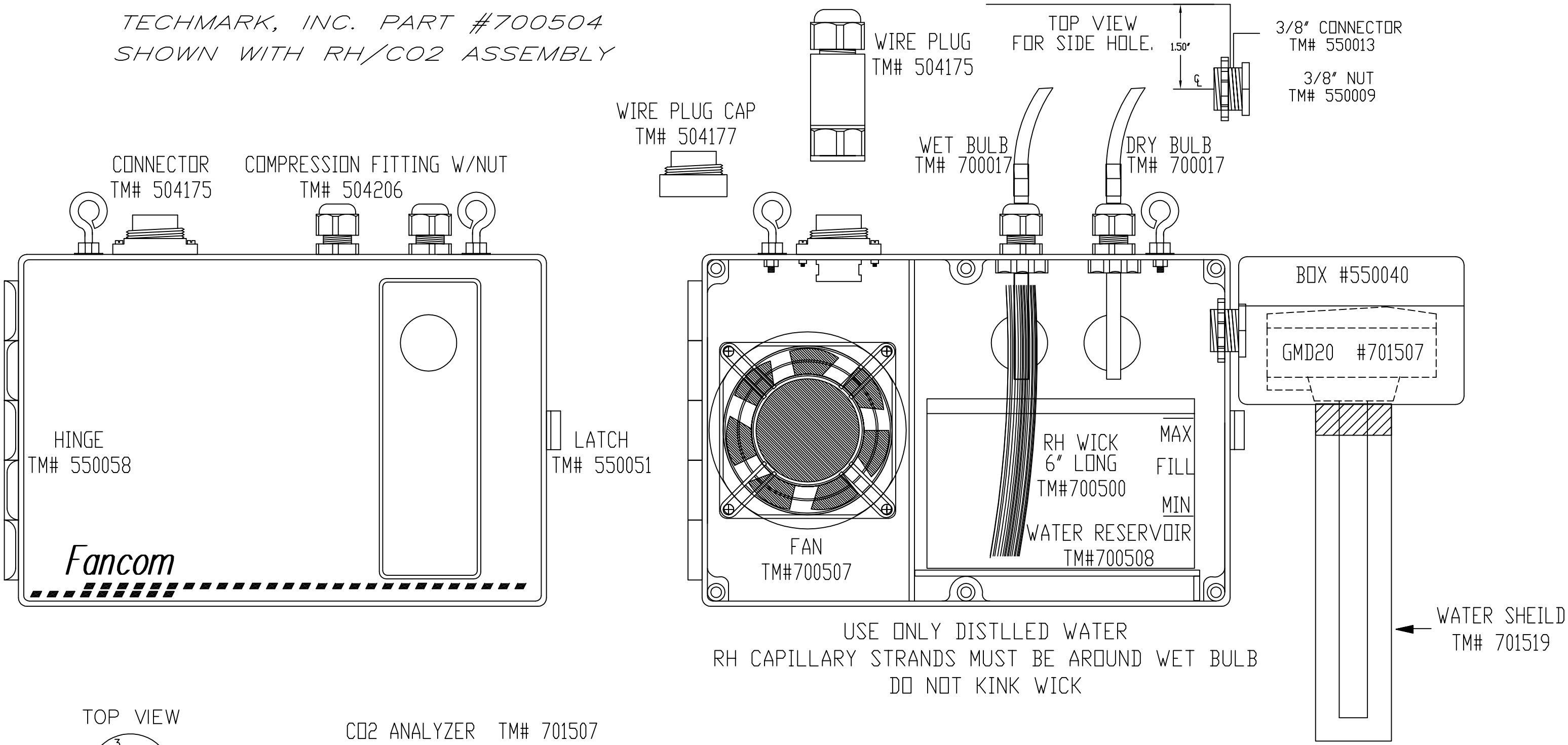

USE ONLY DISTLLED WATER
RH CAPILLARY STRANDS MUST BE AROUND WET BULB
DO NOT KINK WICK

TOP VIEW

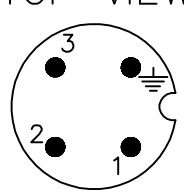

QUICK DISCONNECT
LOCATED AT TOP
OF R.H. CANNISTER.

RED	–	PIN #1	24VAC	SHARED WITH RH FAN MOTOR
BLACK	–	PIN #3	24VAC	
WHITE	–	PIN #2	POS + 0–10VDC	
GREEN	–	PIN ⏚	COMM – 0–10VDC	

18–20" – TWISTED 4 CONDUCT WIRE #509002

CO2 ANALYZER TM# 701507

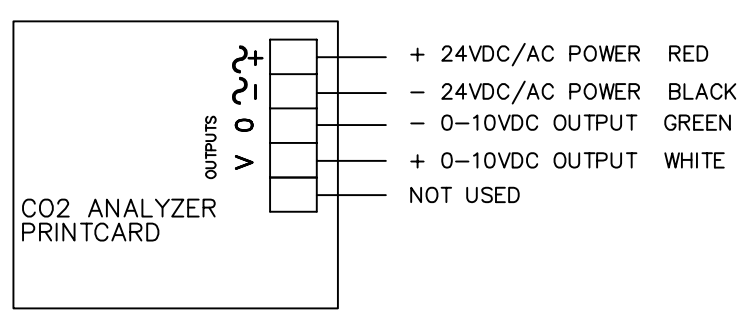

USE ONLY 4 CONDUCTOR SHEILDED WIRE #509002
PLACE DUCT-SEAL IN ACCESS HOLE TO CO2 ANALYZER

REV	NUMBER	DESCRIPTION OF CHANGE	DATE	CK'D
A		RELEASED	3/19/2010	

TECHMARK INC.
5801 W. MT. HOPE HWY.
LANSING, MI 48917

DRAWING TITLE: RH / CO2 PARTS LIST

TOLERANCE UNLESS NOTED
DECIMAL ± .063
HOLE DIA. ± .010
ANGLES ± 1°
MACH. FINISH √
DO NOT SCALE

WEIGHT
SCALE NTS
DRAWN JRG DATE 3/19/2010
CHECKED
PROJ ENG

MATERIAL
FINISH

SHEET 1 OF 1
B
DRAWING NUMBER: RH PARTS